3-wire Serial EEPROM

16K (2048 x 8 or 1024 x 16)

AT93C86

Features

- **Low-voltage and Standard-voltage Operation**
  - **2.7 (V_{CC} = 2.7V to 5.5V)**
- **User Selectable Internal Organization**
  - **16K: 2048 x 8 or 1024 x 16**
- **3-wire Serial Interface**
- **Sequential Read Operation**
- **Schmitt Trigger, Filtered Inputs for Noise Suppression**
- **2 MHz Clock Rate (5V) Compatibility**
- **Self-timed Write Cycle (10 ms max)**
- **High Reliability**
  - **Endurance: 1 Million Write Cycles**
  - **Data Retention: 100 Years**
- **Automotive Grade, Extended Temperature and Lead-Free Devices Available**
- **8-lead PDIP, 8-lead JEDEC SOIC, and 8-lead TSSOP Packages**

Description

The AT93C86 provides 16384 bits of serial electrically erasable programmable read only memory (EEPROM) organized as 1024 words of 16 bits each when the ORG Pin is connected to V_{CC} and 2048 words of 8 bits each when it is tied to ground. The device is optimized for use in many industrial and commercial applications where low power and low voltage operations are essential. The AT93C86 is available in space saving 8-lead PDIP, 8-lead JEDEC SOIC and 8-lead TSSOP packages.

The AT93C86 is enabled through the Chip Select pin (CS), and accessed via a 3-wire serial interface consisting of Data Input (DI), Data Output (DO), and Shift Clock (SK).

Pin Configurations

Pin Name	Function
CS	Chip Select
SK	Serial Data Clock
DI	Serial Data Input
DO	Serial Data Output
GND	Ground
VCC	Power Supply
ORG	Internal Organization
DC	Don't Connect

8-lead PDIP

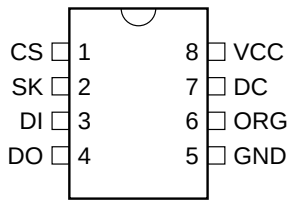

8-lead SOIC

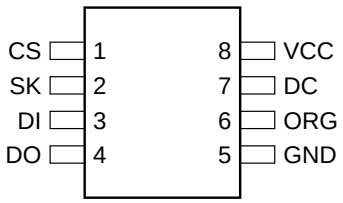

8-lead TSSOP

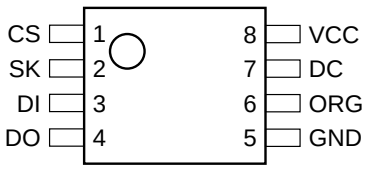

Rev. 1237E–SEEPR–01/03

Upon receiving a READ instruction at DI, the address is decoded and the data is clocked out serially on the data output pin DO. The WRITE cycle is completely self-timed and no separate ERASE cycle is required before WRITE. The WRITE cycle is only enabled when the part is in the ERASE/WRITE ENABLE state. When CS is brought “high” following the initiation of a WRITE cycle, the DO pin outputs the READY/BUSY status of the part. The AT93C86 is available in a 2.7V to 5.5V version.

Absolute Maximum Ratings*

Operating Temperature	-55°C to +125°C
Storage Temperature	-65°C to +150°C
Voltage on any Pin with Respect to Ground	-1.0V to +7.0V
Maximum Operating Voltage	6.25V
DC Output Current	5.0 mA

*NOTICE: Stresses beyond those listed under “Absolute Maximum Ratings” may cause permanent damage to the device. This is a stress rating only and functional operation of the device at these or any other conditions beyond those indicated in the operational sections of this specification is not implied. Exposure to absolute maximum rating conditions for extended periods may affect device reliability

Block Diagram

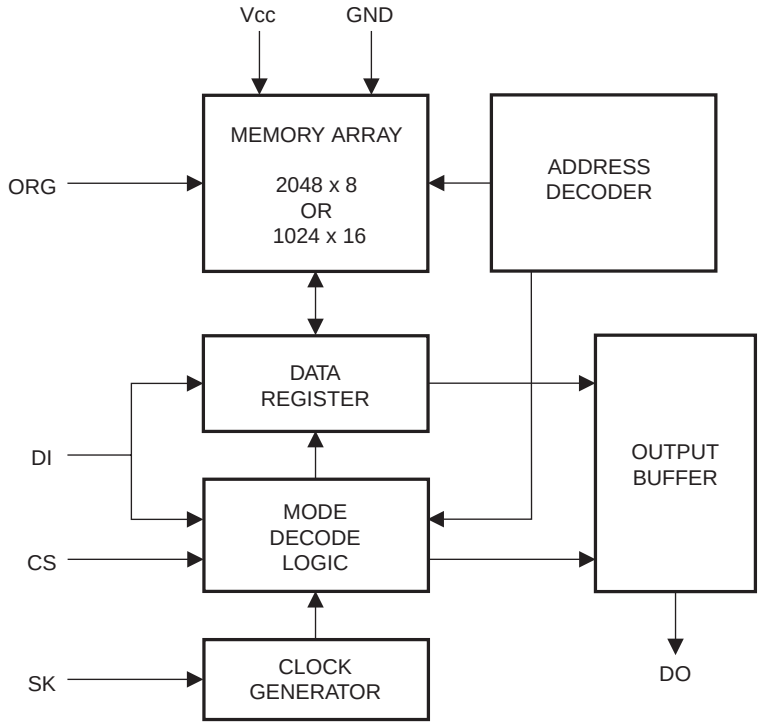

Note: 1. When the ORG pin is connected to Vcc, the x 16 organization is selected. When it is connected to ground, the x 8 organization is selected. If the ORG pin is left unconnected and the application does not load the input beyond the capability of the internal 1 Meg ohm pullup, then the x 16 organization is selected. This feature is not available on the 1.8V devices.

Pin Capacitance[1]

Applicable over recommended operating range from T_A = 25°C, f = 1.0 MHz, V_{CC} = +5.0V (unless otherwise noted).

Symbol	Test Conditions	Max	Units	Conditions
C_{OUT}	Output Capacitance (DO)	5	pF	V_{OUT} = 0V
C_{IN}	Input Capacitance (CS, SK, DI)	5	pF	V_{IN} = 0V

Note: 1. This parameter is characterized and is not 100% tested.

DC Characteristics

Applicable over recommended operating range from: T_{AI} = -40°C to +85°C, V_{CC} = +2.7V to +5.5V, T_{AE} = -40°C to +125°C, V_{CC} = +2.7V to +5.5V (unless otherwise noted).

Symbol	Parameter	Test Condition		Min	Typ	Max	Unit
V_{CC1}	Supply Voltage			2.7		5.5	V
V_{CC2}	Supply Voltage			4.5		5.5	V
I_{CC}	Supply Current	V_{CC} = 5.0V	READ at 1.0 MHz		0.5	2.0	mA
			WRITE at 1.0 MHz		0.5	2.0	mA
I_{SB1}	Standby Current	V_{CC} = 2.7V	CS = 0V		6.0	10.0	µA
I_{SB2}	Standby Current	V_{CC} = 5.0V	CS = 0V		17	30	µA
I_{IL}	Input Leakage	V_{IN} = 0V to V_{CC}			0.1	1.0	µA
I_{OL}	Output Leakage	V_{IN} = 0V to V_{CC}			0.1	1.0	µA
V_{IL1} [1] V_{IH1} [1]	Input Low Voltage Input High Voltage	4.5V ≤ V_{CC} ≤ 5.5V		-0.6 V_{CC} x 0.7		V_{CC} x 0.3 V_{CC} + 1	V
V_{IL2} [1] V_{IH2} [1]	Input Low Voltage Input High Voltage	V_{CC} ≤ 2.7V		-0.6 V_{CC} x 0.7		V_{CC} x 0.3 V_{CC} + 1	V
V_{OL1} V_{OH1}	Output Low Voltage Output High Voltage	4.5V ≤ V_{CC} ≤ 5.5V	I_{OL} = 2.1 mA			0.4	V
			I_{OH} = -0.4 mA	2.4			V
V_{OL2} V_{OH2}	Output Low Voltage Output High Voltage	V_{CC} ≤ 2.7V	I_{OL} = 0.15 mA			0.2	V
			I_{OH} = -100 µA	V_{CC} - 0.2			V

Note: 1. V_{IL} min and V_{IH} max are reference only and are not tested.

AC Characteristics

Applicable over recommended operating range from T_{AI} = -40°C to + 85°C, T_{AE} = -40°C to + 125°C,V_{CC} = As Specified, CL = 1 TTL Gate and 100 pF (unless otherwise noted).

Symbol	Parameter	Test Condition		Min	Typ	Max	Units
f_{SK}	SK Clock Frequency	$4.5V \le V_{CC} \le 5.5V$ $2.7V \le V_{CC} \le 5.5V$		0 0		2 1	MHz
t_{SKH}	SK High Time	$4.5V \le V_{CC} \le 5.5V$ $2.7V \le V_{CC} \le 5.5V$		250 250			ns
t_{SKL}	SK Low Time	$4.5V \le V_{CC} \le 5.5V$ $2.7V \le V_{CC} \le 5.5V$		250 250			ns
t_{CS}	Minimum CS Low Time	$4.5V \le V_{CC} \le 5.5V$ $2.7V \le V_{CC} \le 5.5V$		250 250			ns
t_{CSS}	CS Setup Time	Relative to SK	$4.5V \le V_{CC} \le 5.5V$ $2.7V \le V_{CC} \le 5.5V$	50 50			ns
t_{DIS}	DI Setup Time	Relative to SK	$4.5V \le V_{CC} \le 5.5V$ $2.7V \le V_{CC} \le 5.5V$	100 100			ns
t_{CSH}	CS Hold Time	Relative to SK		0			ns
t_{DIH}	DI Hold Time	Relative to SK	$4.5V \le V_{CC} \le 5.5V$ $2.7V \le V_{CC} \le 5.5V$	100 100			ns
t_{PD1}	Output Delay to ‘1’	AC Test	$4.5V \le V_{CC} \le 5.5V$ $2.7V \le V_{CC} \le 5.5V$			250 250	ns
t_{PD0}	Output Delay to ‘0’	AC Test	$4.5V \le V_{CC} \le 5.5V$ $2.7V \le V_{CC} \le 5.5V$			250 250	ns
t_{SV}	CS to Status Valid	AC Test	$4.5V \le V_{CC} \le 5.5V$ $2.7V \le V_{CC} \le 5.5V$			250 250	ns
t_{DF}	CS to DO in High Impedance	AC Test CS = V_{IL}	$4.5V \le V_{CC} \le 5.5V$ $2.7V \le V_{CC} \le 5.5V$			100 100	ns
t_{WP}	Write Cycle Time					10	ms
			$4.5V \le V_{CC} \le 5.5V$		4		ms
Endurance[1]	5.0V, 25°C, Page Mode			1M			Write Cycles

Note: 1. This parameter is characterized and is not 100% tested.

Instruction Set for the AT93C86

Instruction	SB	Op Code	Address		Data		Comments
			x 8	x 16	x 8	x 16	
READ	1	10	A_{10} - A_0	A_9 - A_0			Reads data stored in memory, at specified address.
EWEN	1	00	11XXXXXXXX	11XXXXXXXX			Write enable must precede all programming modes.
ERASE	1	11	A_{10} - A_0	A_9 - A_0			Erases memory location A_n - A_0.
WRITE	1	01	A_{10} - A_0	A_9 - A_0	D_7 - D_0	D_{15} - D_0	Writes memory location A_n - A_0.
ERAL	1	00	10XXXXXXXX	10XXXXXXXX			Erases all memory locations. Valid only at V_{CC} = 4.5V to 5.5V.
WRAL	1	00	01XXXXXXXX	01XXXXXXXX	D_7 - D_0	D_{15} - D_0	Writes all memory locations. Valid when V_{CC} = 4.5V to 5.5V and Disable Register cleared.
EWDS	1	00	00XXXXXXXX	00XXXXXXXX			Disables all programming instructions.

Functional Description

The AT93C86 is accessed via a simple and versatile 3-wire serial communication interface. Device operation is controlled by seven instructions issued by the host processor. **A valid instruction starts with a rising edge of CS** and consists of a Start Bit (logic “1”) followed by the appropriate Op Code and the desired memory Address location.

READ (READ): The Read (READ) instruction contains the Address code for the memory location to be read. After the instruction and address are decoded, data from the selected memory location is available at the serial output pin DO. Output data changes are synchronized with the rising edges of serial clock SK. It should be noted that a dummy bit (logic “0”) precedes the 8- or 16-bit data output string.

ERASE/WRITE (EWEN): To assure data integrity, the part automatically goes into the Erase/Write Disable (EWDS) state when power is first applied. An Erase/Write Enable (EWEN) instruction must be executed first before any programming instructions can be carried out. Please note that once in the Erase/Write Enable state, programming remains enabled until an Erase/Write Disable (EWDS) instruction is executed or V_{CC} power is removed from the part.

ERASE (ERASE): The Erase (ERASE) instruction programs all bits in the specified memory location to the logical “1” state. The self-timed erase cycle starts once the ERASE instruction and address are decoded. The DO pin outputs the READY/BUSY status of the part if CS is brought high after being kept low for a minimum of 250 ns (t_{CS}). A logic “1” at pin DO indicates that the selected memory location has been erased, and the part is ready for another instruction.

WRITE (WRITE): The Write (WRITE) instruction contains the 8 or 16 bits of data to be written into the specified memory location. The self-timed programming cycle, t_{WP}, starts after the last bit of data is received at serial data input pin DI. The DO pin outputs the READY/BUSY status of the part if CS is brought high after being kept low for a minimum of 250 ns (t_{CS}). A logic “0” at DO indicates that programming is still in progress. A logic “1” indicates that the memory location at the specified address has been written with the data pattern contained in the instruction and the part is ready for further instructions. **A READY/BUSY status cannot be obtained if the CS is brought high after the end of the self-timed programming cycle, t_{WP}.**

ERASE ALL (ERAL): The Erase All (ERAL) instruction programs every bit in the memory array to the logic “1” state and is primarily used for testing purposes. The DO pin outputs the READY/BUSY status of the part if CS is brought high after being kept low for a minimum of 250 ns (t_{CS}). The ERAL instruction is valid only at V_{CC} = 5.0V ± 10%.

WRITE ALL (WRAL): The Write All (WRAL) instruction programs all memory locations with the data patterns specified in the instruction. The DO pin outputs the READY/BUSY status of the part if CS is brought high after being kept low for a minimum of 250 ns (t_{CS}). The WRAL instruction is valid only at V_{CC} = 5.0V ± 10%.

ERASE/WRITE DISABLE (EWDS): To protect against accidental data disturb, the Erase/Write Disable (EWDS) instruction disables all programming modes and should be executed after all programming operations. The operation of the READ instruction is independent of both the EWEN and EWDS instructions and can be executed at any time.

Timing Diagrams

Synchronous Data Timing

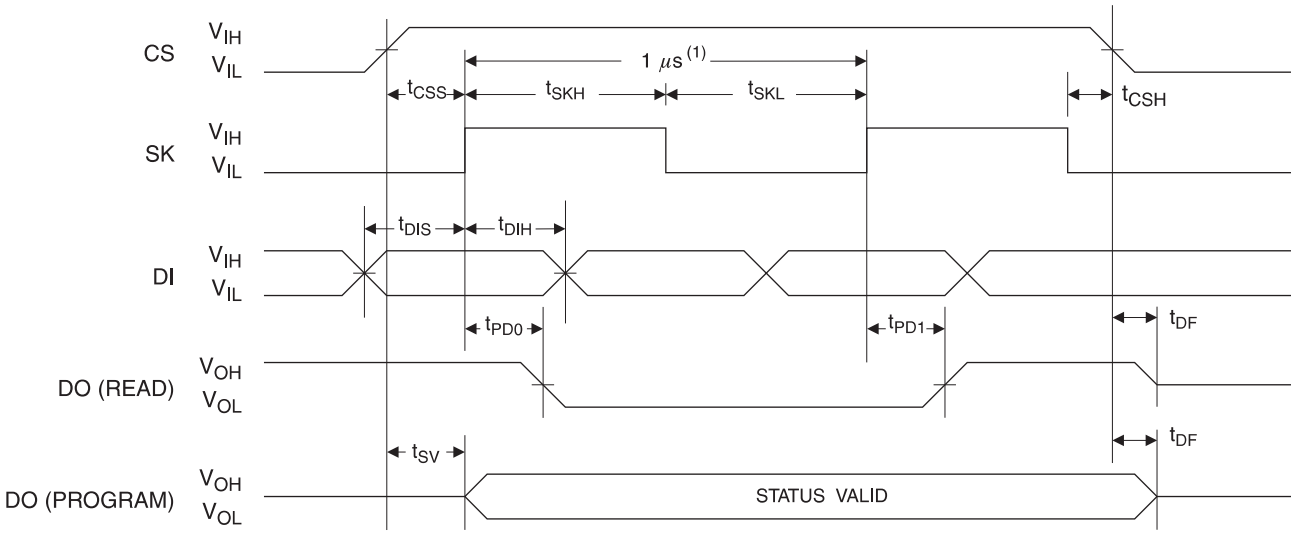

Note: 1. This is the minimum SK period.

Organization Key for Timing Diagrams

I/O	AT93C86 (16K)	
	x 8	x 16
A_N	A_{10}	A_9
D_N	D_7	D_{15}

READ Timing

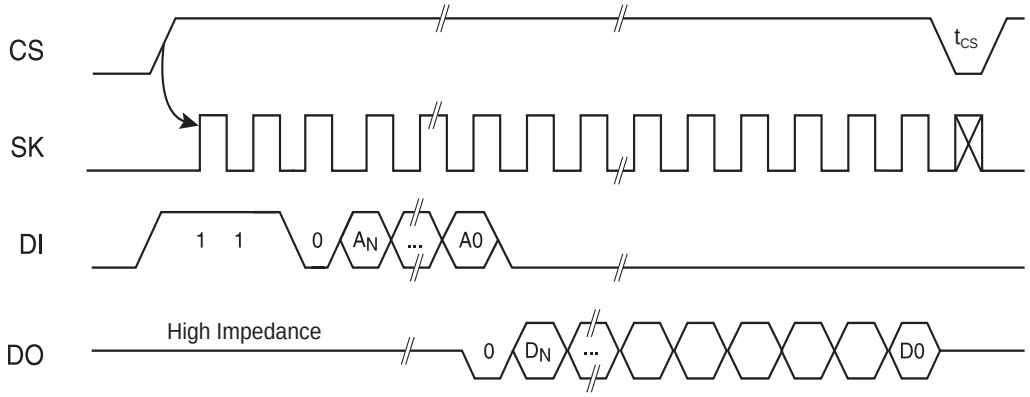

EWEN Timing

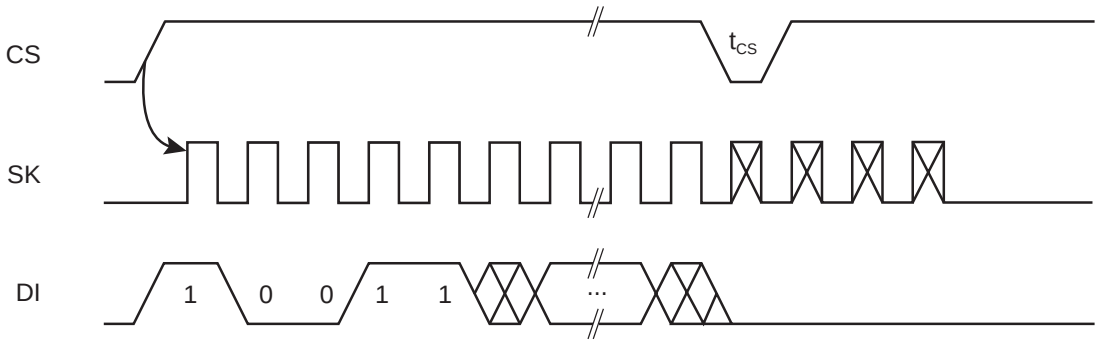

EWDS Timing

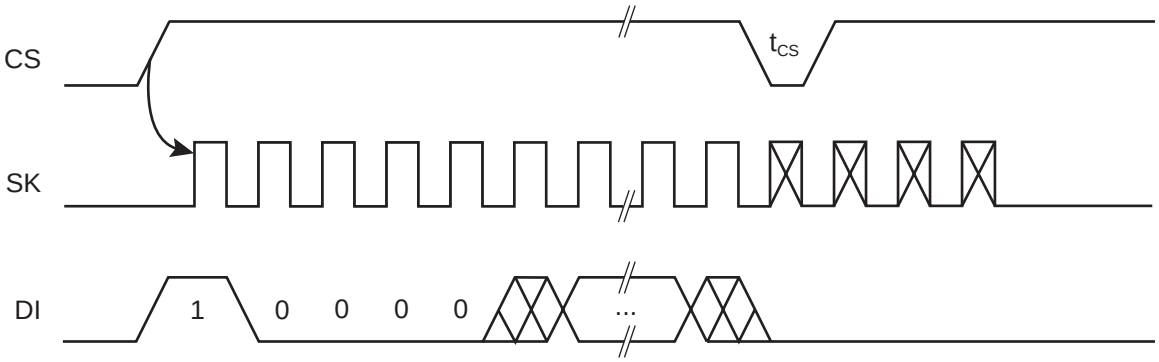

WRITE Timing

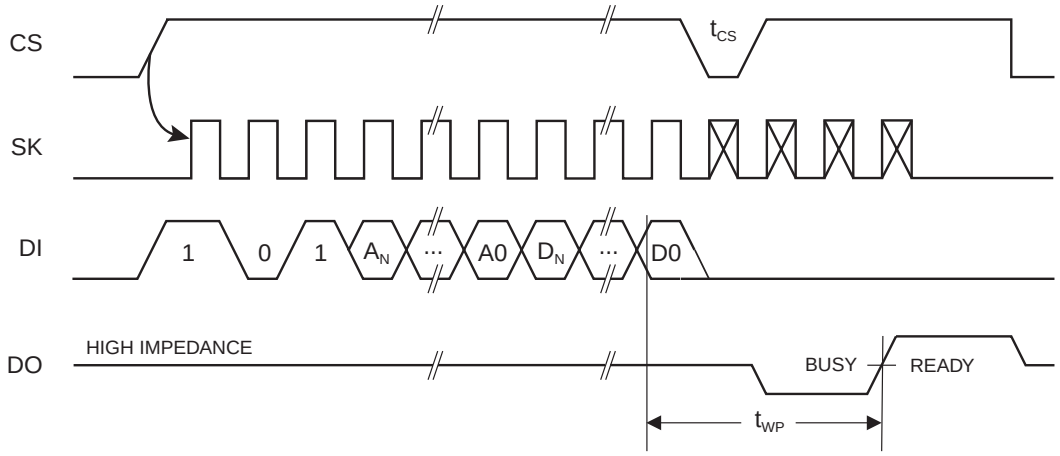

WRAL Timing(1)

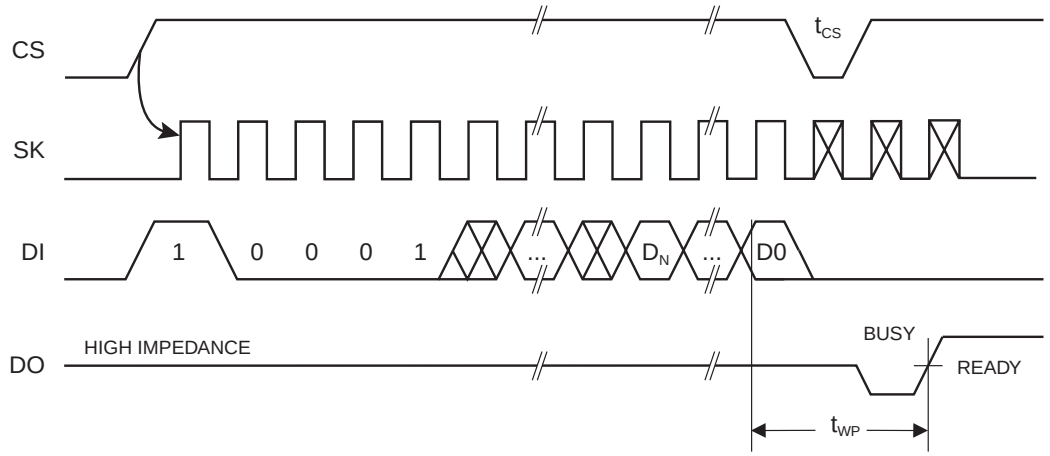

Note: 1. Valid only at V_{CC} = 4.5V to 5.5V.

ERASE Timing

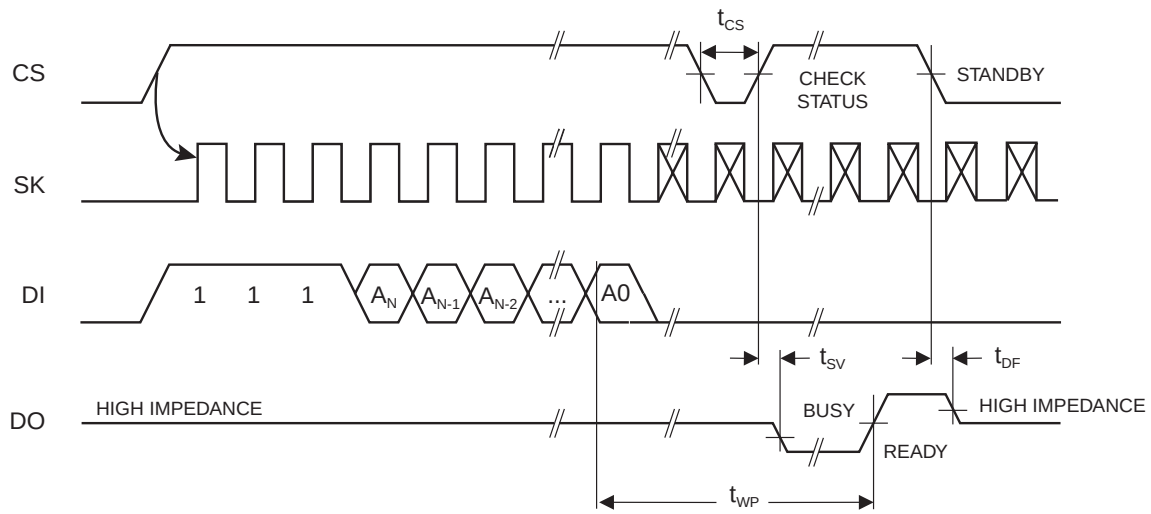

ERAL Timing(1)

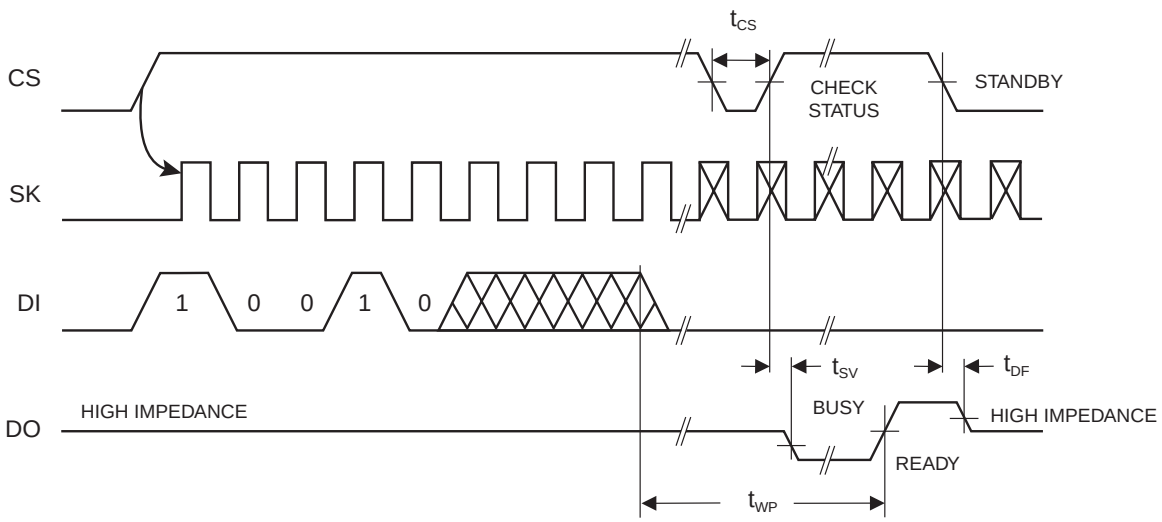

Note: 1. Valid only at V_{CC} = 4.5V to 5.5V.

AT93C86 Ordering Information

Ordering Code	Package	Operation Range
AT93C86-10PI-2.7 AT93C86-10SI-2.7 AT93C86-10TI-2.7	8P3 8S1 8A2	Industrial (-40°C to 85°C)
AT93C86-10SJ-2.7	8S1	Lead-Free/Industrial Temperature (-40°C to 85°C)
AT93C86-10SE-2.7	8S1	High Grade/Extended Temperature (-40°C to 125°C)

Note: For 2.7V devices used in a 4.5V to 5.5V range, please refer to performance values in the AC and DC characteristics tables.

Package Type	
8P3	8-lead, 0.300" Wide, Plastic Dual Inline Package (PDIP)
8S1	8-lead, 0.150" Wide, Plastic Gull Wing Small Outline (JEDEC SOIC)
8A2	8-lead, 0.170" Wide, Thin Shrink Small Outline Package (TSSOP)
Options	
-2.7	Low Voltage (2.7V to 5.5V)

Packaging Information

8P3 – PDIP

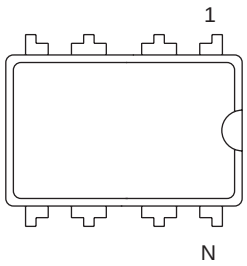

Top View

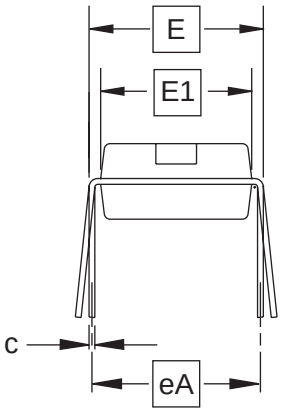

End View

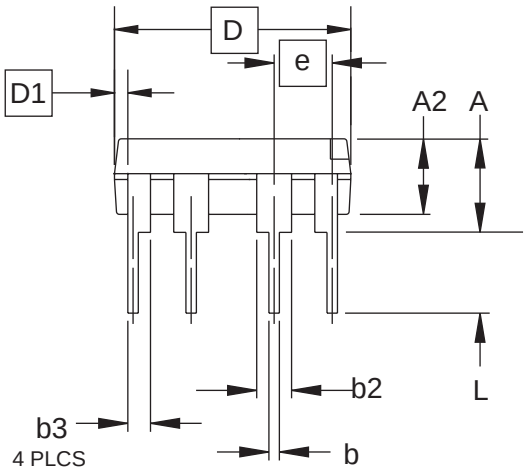

Side View

COMMON DIMENSIONS
(Unit of Measure = inches)

SYMBOL	MIN	NOM	MAX	NOTE
A			0.210	2
A2	0.115	0.130	0.195	
b	0.014	0.018	0.022	5
b2	0.045	0.060	0.070	6
b3	0.030	0.039	0.045	6
c	0.008	0.010	0.014	
D	0.355	0.365	0.400	3
D1	0.005			3
E	0.300	0.310	0.325	4
E1	0.240	0.250	0.280	3
e	0.100 BSC			
eA	0.300 BSC			4
L	0.115	0.130	0.150	2

Notes:
1. This drawing is for general information only; refer to JEDEC Drawing MS-001, Variation BA for additional information.
2. Dimensions A and L are measured with the package seated in JEDEC seating plane Gauge GS-3.
3. D, D1 and E1 dimensions do not include mold Flash or protrusions. Mold Flash or protrusions shall not exceed 0.010 inch.
4. E and eA measured with the leads constrained to be perpendicular to datum.
5. Pointed or rounded lead tips are preferred to ease insertion.
6. b2 and b3 maximum dimensions do not include Dambar protrusions. Dambar protrusions shall not exceed 0.010 (0.25 mm).

01/09/02

	TITLE	DRAWING NO.	REV.
2325 Orchard Parkway San Jose, CA 95131	**8P3**, 8-lead, 0.300" Wide Body, Plastic Dual In-line Package (PDIP)	8P3	B

8S1 – JEDEC SOIC

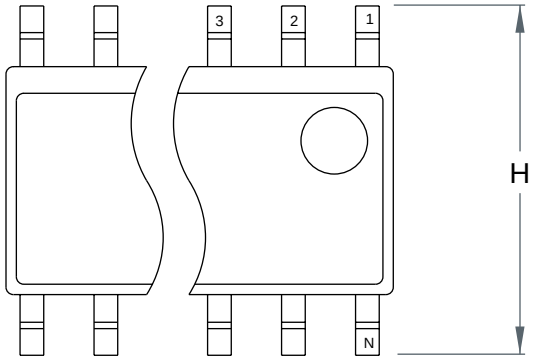

Top View

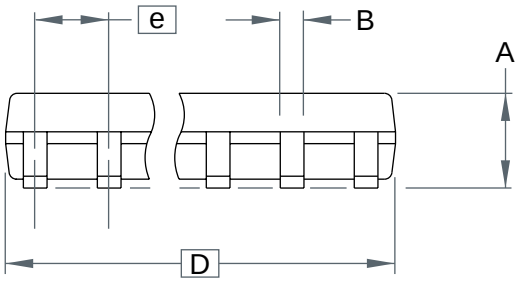

Side View

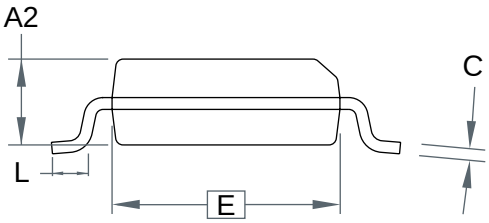

End View

COMMON DIMENSIONS
(Unit of Measure = mm)

SYMBOL	MIN	NOM	MAX	NOTE
A	–	–	1.75	
B	–	–	0.51	
C	–	–	0.25	
D	–	–	5.00	
E	–	–	4.00	
e		1.27 BSC		
H	–	–	6.20	
L	–	–	1.27	

Note: This drawing is for general information only. Refer to JEDEC Drawing MS-012 for proper dimensions, tolerances, datums, etc.

10/10/01

2325 Orchard Parkway San Jose, CA 95131	**TITLE** **8S1**, 8-lead (0.150" Wide Body), Plastic Gull Wing Small Outline (JEDEC SOIC)	**DRAWING NO.** 8S1	**REV.** A

8A2 – TSSOP

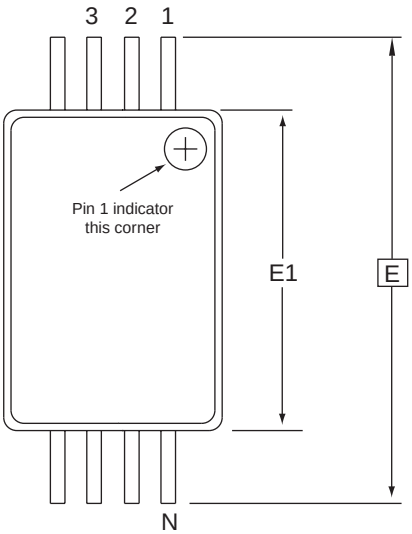

Top View

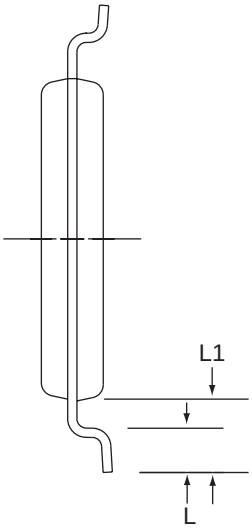

End View

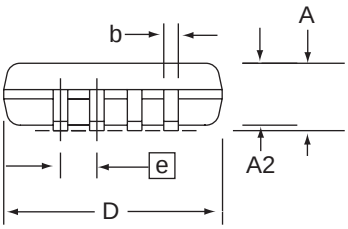

Side View

COMMON DIMENSIONS
(Unit of Measure = mm)

SYMBOL	MIN	NOM	MAX	NOTE
D	2.90	3.00	3.10	2, 5
E		6.40 BSC		
E1	4.30	4.40	4.50	3, 5
A	–	–	1.20	
A2	0.80	1.00	1.05	
b	0.19	–	0.30	4
e		0.65 BSC		
L	0.45	0.60	0.75	
L1		1.00 REF		

Notes:
1. This drawing is for general information only. Refer to JEDEC Drawing MO-153, Variation AA, for proper dimensions, tolerances, datums, etc.
2. Dimension D does not include mold Flash, protrusions or gate burrs. Mold Flash, protrusions and gate burrs shall not exceed 0.15 mm (0.006 in) per side.
3. Dimension E1 does not include inter-lead Flash or protrusions. Inter-lead Flash and protrusions shall not exceed 0.25 mm (0.010 in) per side.
4. Dimension b does not include Dambar protrusion. Allowable Dambar protrusion shall be 0.08 mm total in excess of the b dimension at maximum material condition. Dambar cannot be located on the lower radius of the foot. Minimum space between protrusion and adjacent lead is 0.07 mm.
5. Dimension D and E1 to be determined at Datum Plane H.

5/30/02

ATMEL 2325 Orchard Parkway San Jose, CA 95131	**TITLE** **8A2**, 8-lead, 4.4 mm Body, Plastic Thin Shrink Small Outline Package (TSSOP)	**DRAWING NO.** 8A2	**REV.** B

Atmel Headquarters

Corporate Headquarters
2325 Orchard Parkway
San Jose, CA 95131
TEL 1(408) 441-0311
FAX 1(408) 487-2600

Europe
Atmel Sarl
Route des Arsenaux 41
Case Postale 80
CH-1705 Fribourg
Switzerland
TEL (41) 26-426-5555
FAX (41) 26-426-5500

Asia
Room 1219
Chinachem Golden Plaza
77 Mody Road Tsimshatsui
East Kowloon
Hong Kong
TEL (852) 2721-9778
FAX (852) 2722-1369

Japan
9F, Tonetsu Shinkawa Bldg.
1-24-8 Shinkawa
Chuo-ku, Tokyo 104-0033
Japan
TEL (81) 3-3523-3551
FAX (81) 3-3523-7581

Atmel Operations

Memory
2325 Orchard Parkway
San Jose, CA 95131
TEL 1(408) 441-0311
FAX 1(408) 436-4314

Microcontrollers
2325 Orchard Parkway
San Jose, CA 95131
TEL 1(408) 441-0311
FAX 1(408) 436-4314

La Chantrerie
BP 70602
44306 Nantes Cedex 3, France
TEL (33) 2-40-18-18-18
FAX (33) 2-40-18-19-60

ASIC/ASSP/Smart Cards
Zone Industrielle
13106 Rousset Cedex, France
TEL (33) 4-42-53-60-00
FAX (33) 4-42-53-60-01

1150 East Cheyenne Mtn. Blvd.
Colorado Springs, CO 80906
TEL 1(719) 576-3300
FAX 1(719) 540-1759

Scottish Enterprise Technology Park
Maxwell Building
East Kilbride G75 0QR, Scotland
TEL (44) 1355-803-000
FAX (44) 1355-242-743

RF/Automotive
Theresienstrasse 2
Postfach 3535
74025 Heilbronn, Germany
TEL (49) 71-31-67-0
FAX (49) 71-31-67-2340

1150 East Cheyenne Mtn. Blvd.
Colorado Springs, CO 80906
TEL 1(719) 576-3300
FAX 1(719) 540-1759

Biometrics/Imaging/Hi-Rel MPU/
High Speed Converters/RF Datacom
Avenue de Rochepleine
BP 123
38521 Saint-Egreve Cedex, France
TEL (33) 4-76-58-30-00
FAX (33) 4-76-58-34-80

e-mail
literature@atmel.com

Web Site
http://www.atmel.com

© Atmel Corporation 2003.
Atmel Corporation makes no warranty for the use of its products, other than those expressly contained in the Company's standard warranty which is detailed in Atmel's Terms and Conditions located on the Company's web site. The Company assumes no responsibility for any errors which may appear in this document, reserves the right to change devices or specifications detailed herein at any time without notice, and does not make any commitment to update the information contained herein. No licenses to patents or other intellectual property of Atmel are granted by the Company in connection with the sale of Atmel products, expressly or by implication. Atmel's products are not authorized for use as critical components in life support devices or systems.

ATMEL® is the registered trademark of Atmel.

Other terms and product names may be the trademarks of others.

Printed on recycled paper.

1237E–SEEPR–01/03 xM